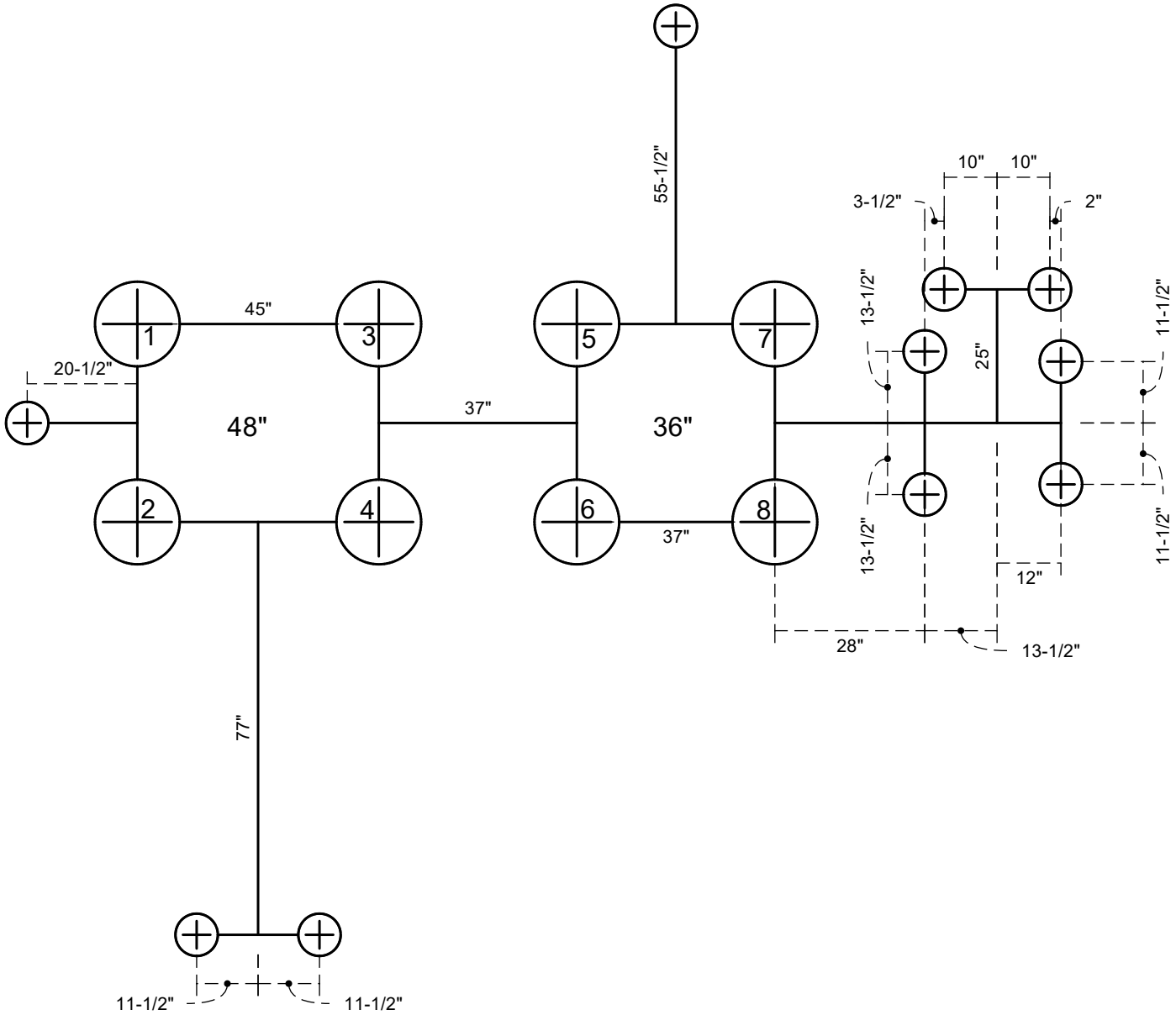

Furniture Leisure
Commercial Site Furnishings
FurnitureLeisure.com PoolFurnitureSupply.com
PicnicFurniture.com PicnicTableSupplier.com
ParkTables.com UBrace.com
1-800-213-2401 | sales@furnitureIsiesure.com

Footer Layout provided as a guide. Measurements rounded to nearest 1/2 inch. For true accuracy, please measure using equipment onsite. Equipment dimensions are subject to change without notice.

PKP004GraniteManor

March 15, 2018

Footer and Post Layout