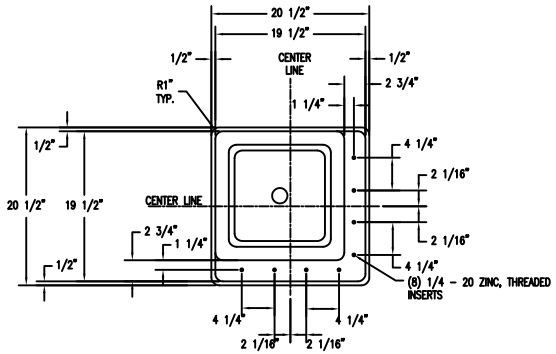

2 TOP VIEW TF5085
Scale: 1 1/2" = 1'

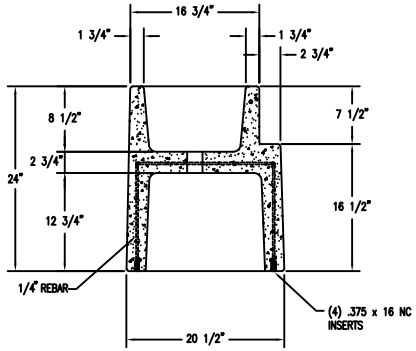

1 CROSS SECTION OF BENCH TF5085
Scale: 1 1/2" = 1'

WAUSAU TILE SITE FURNISHINGS

P.O. BOX 1520 WAUSAU, WISCONSIN 54402-1520 800/388-6728
E-MAIL: WRE@WAUSAUTILE.COM
WEB SITE: WWW.WAUSAUTILE.COM

REVISIONS						DRAWN BY MJK	JOB	MATERIAL CONCRETE
NO.	DATE	BY	NO.	DATE	BY	TITLE	JOB NO.	WEIGHT 425 LBS.
1			4			SCALE AS NOTED	UNLESS OTHERWISE SPECIFIED DIMENSIONS ARE IN INCHES ANGLES ±0.5° FRACTIONS ± 1/64" 2 PL ±0.01 3 PL ±0.005	DATE 4/20/11 FINISH OPTIONS
2			5					DWG. NO. TF5085
3			6					