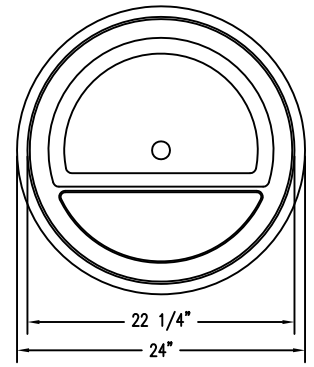

TOP VIEW

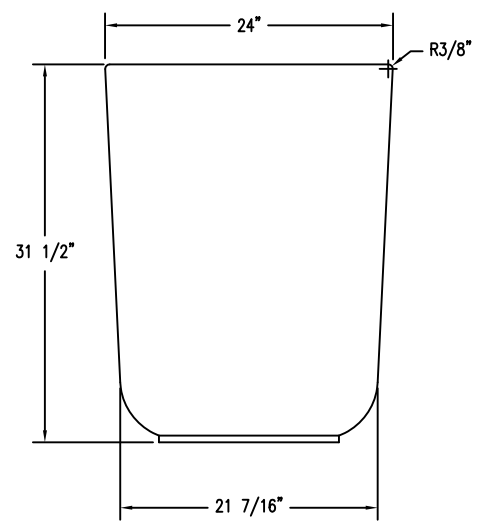

FRONT VIEW

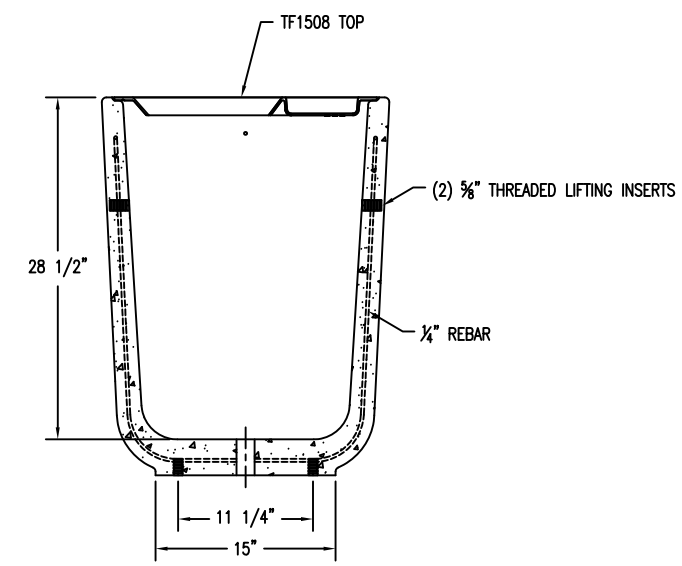

SECTION

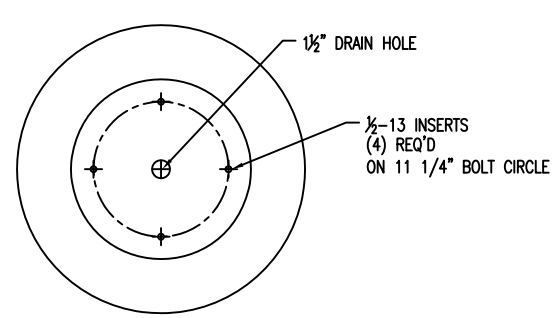

BOTTOM VIEW

WAUSAU TILE SITE FURNISHINGS						P.O. BOX 1520 WAUSAU, WISCONSIN 54402-1520 800/388-8728 E-MAIL: WTILE@WAUSAUTILE.COM WEB SITE: WWW.WAUSAUTILE.COM			
REVISIONS						DRAWN BY MJS	JOB		MATERIAL CONCRETE
NO.	DATE	BY	NO.	DATE	BY	TITLE	JOB NO.		WEIGHT 420 LBS
1			4			SCALE 1/8" = 1"	UNLESS OTHERWISE SPECIFIED DIMENSIONS ARE IN INCHES ANGLES ±0.5° FRACTIONS ± 1/4 2 PL ±0.01 3 PL ±0.005	DATE 11/16/07	FINISH OPTIONS A,B,C,GT
2			5						DWG. NO. TF1086
3			6						