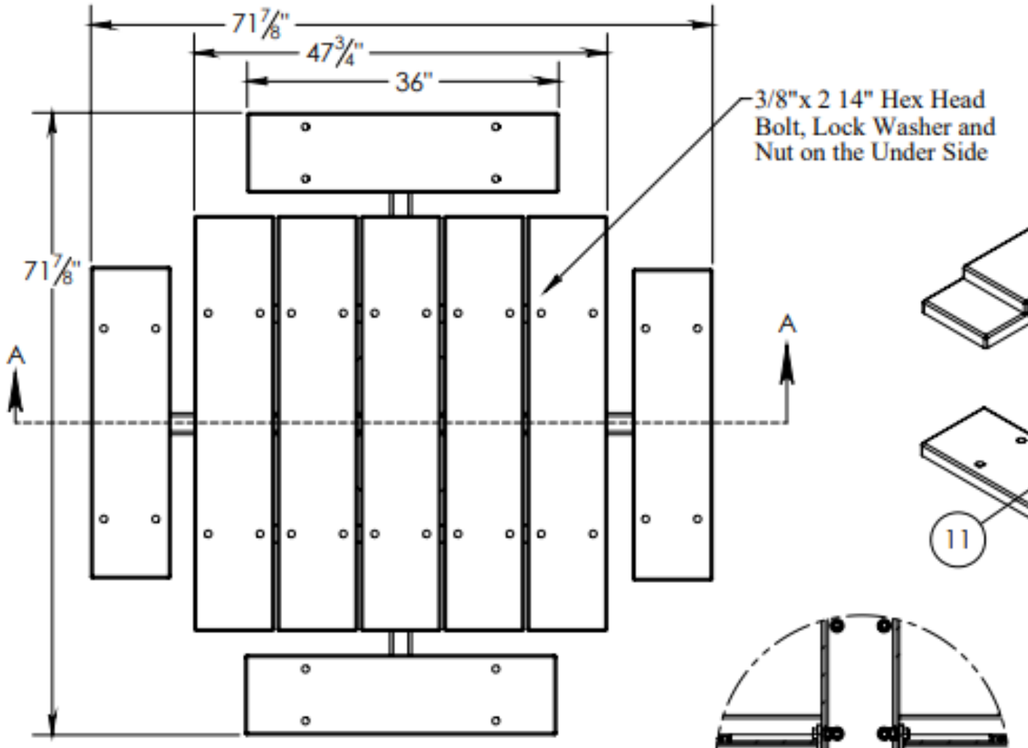

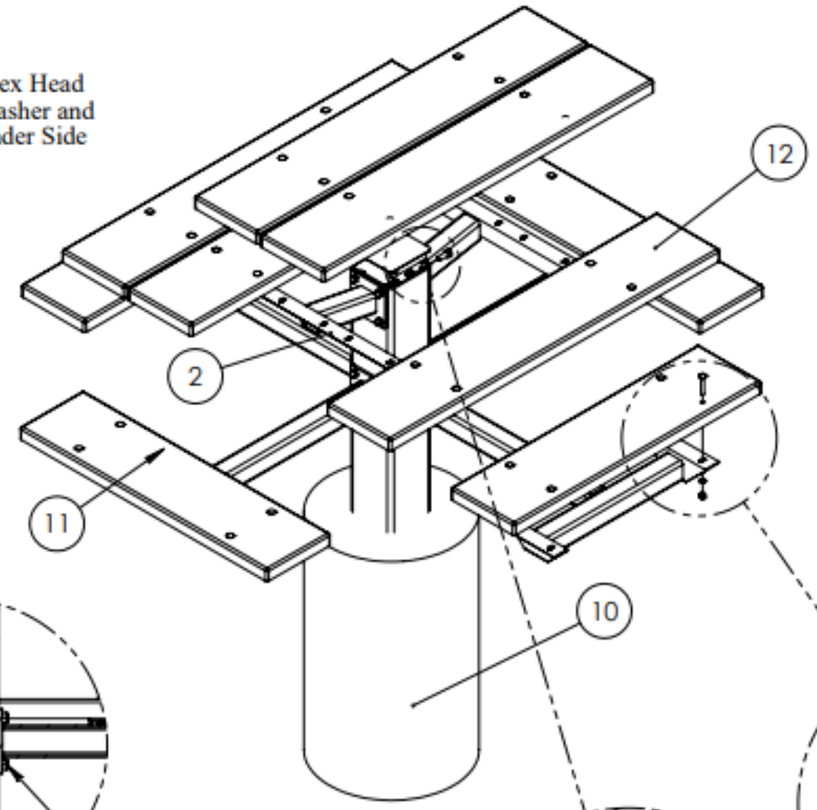

ITEM NO.	PART NUMBER	DESCRIPTION	QTY.
1	4SPT-103	4SPT - PEDESTAL POST GALV	1
2	4SPTW-SA1	TOP ARM ASSY WOOD-ALUM-RP	2
3	4SPT-SA2	SEAT ARM ASSY 22" SEAT MOUNT	4
4	ISPTC-SA5	PEDESTAL CAP ASSY GALV	1
5	HBOLT 0.5000-13x1.25x1.25-N	HEX BOLT 1/2"-13x 1 1/4"	24
6	FLANGEN-1/2	1/2"-13 FLANGED NUT	24
7	Regular LW 0.375	LOCK WASHER 3/8"	36
8	HNUT 0.3750-16-D-N	HEX NUT 3/8"-16	36
9	RHSNBOLT 0.375-16x2.25x1-N	CARRIAGE BOLT 3/8"-16x 2 1/4"	36
10	CONCRETE SONO TUBE		1
11	3SQW-7	2"x 10" SYP TREATED SEAT PLANK	4
12	4SQW-7	SJ 2"x 10" SYP TREATED TOP PLANK	5

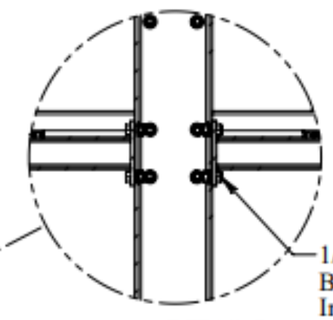

DETAIL B
SCALE 1 : 12

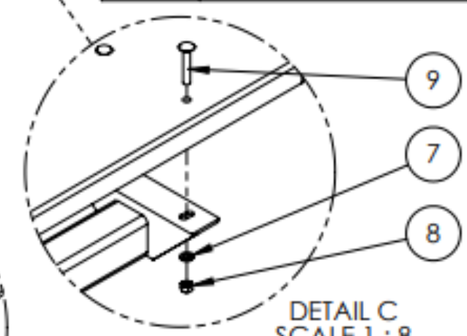

DETAIL C
SCALE 1 : 8

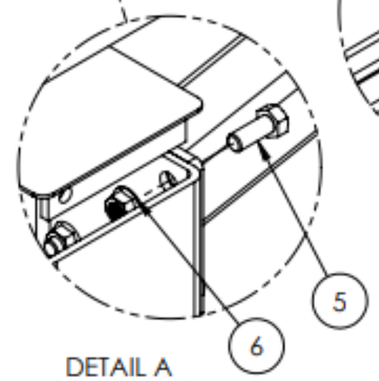

DETAIL A
SCALE 1 : 4

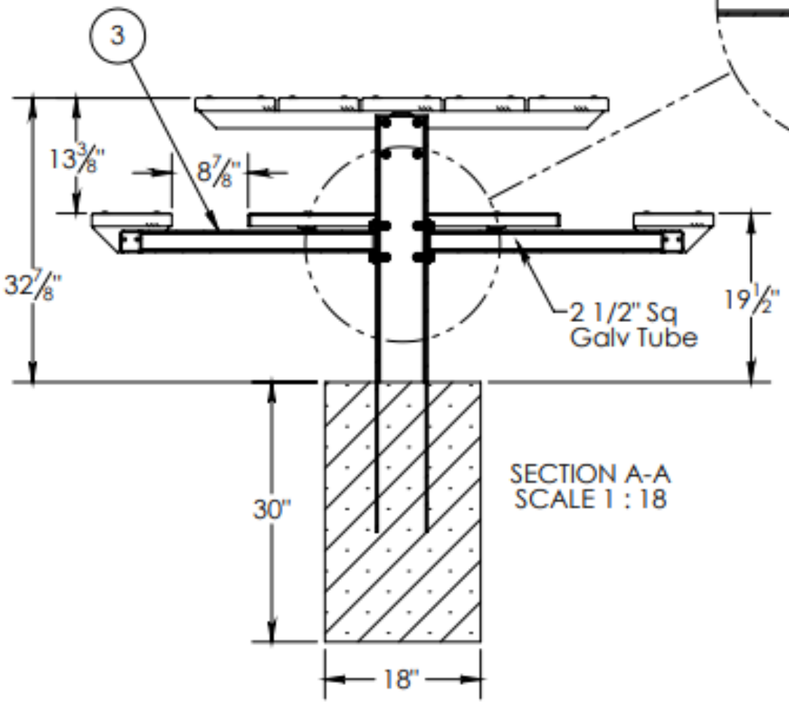

SECTION A-A
SCALE 1 : 18

1. Attach (4) Seat Arm Assemblies, Flanged Nuts are are on the Inside of the Square Tube.
2. Attach the Top Arm Assemblies, Flanged Nuts are on the Inside of the Square Tube.
3. Attach the Seat and Top Planks.

Be Aware when Reaching Inside of Square Tube to Assemble Arms, Top Surface of Galvanized Edges may be Sharp

CHECK WITH LOCAL BUILDING CODES CONCRETE SPECIFICATIONS

GENERAL NOTES:

UNLESS OTHERWISE SPECIFIED:
DIMENSIONS ARE IN INCHES
TOLERANCES:
FRACTIONAL ± 1/32
BEND ± 1/2°
THREE PLACE DECIMAL ± .005
Do Not Scale Drawing
MATERIAL

	NAME	DATE
DRAWN	DAT	3/17/2016
CHECKED		
ENG APPR.		
MFG APPR.		
Last Saved	1/27/2017 1:39:30 PM	
COMMENTS:		

TITLE:

DESC. SINGLE POST TABLE SQUARE SYP TREATED 2" X 10" PLANKS

S:\CADDRWGS\Solidworks\Tables\SPT\Tables\

SIZE B | PART NO. 4SPTGW | REV

SHEET 1 OF 1

Path to Part or Assy - 4SPTGW
S:\CADDRWGS\Solidworks\Tables\SPT\Tables\
Single Post Table Wood

Confidential Drawing and Information is Not to be Copied or Disclosed to Others without the Consent of Kay Industries. Specifications are Subject to Change without Notice